Documents printed to hard copy or saved to personal computers that are not distributed by DCC are considered to be
"UNCONTROLLED REFERENCE COPIES"

TED-0004440 **Design Cover Sheet** **11/10/2023**

ACSEVB-EZ7-37220-100B3 **Page 1 of 5**

Originator: E. Theberge

			Design Rev ->	A											
Doc	Size	Format	Name, Description	Sub-Document Revision											
REV	A	pdf	Revision Control	1											
ASY	A	pdf	Assembly Instructions	1											
BOM	A	pdf	BOM	1											
SCH	A	pdf	Schematic	1											
FAB	-	zip	Gerber Files	4											

Documents printed to hard copy or saved to personal computers that are not distributed by DCC are considered to be
“UNCONTROLLED REFERENCE COPIES”

This page left intentionally blank.

Documents printed to hard copy or saved to personal computers that are not distributed by DCC are considered to be
"UNCONTROLLED REFERENCE COPIES"

1. RoHS Compliance Required?
   Yes.

2. All soldering must meet the criteria for Class II or better per IPC-A-610 Solder Joint Acceptance Criteria.

3. All assemblies to be cleaned of flux residues and other contaminates.

4. Visual quality inspection expected on all completed assemblies.

5. Functional testing not required unless otherwise specified below.

6. Completed assemblies to be shipped in ESD bags.

7. All component substitutions to be approved by Allegro.

8. Other Allegro Specifications required for build:
   None.

9. Are there optional ways to build this TED pack?
   No.

Assembly:

1. Install all SMT parts.
   If Allegro supplies SMT devices they may be installed at this time.

   Please note: the Allegro sensor may be installed at the same time as all other parts!
   It is listed seperately for ease of documentation.
   [This TED # is used to build multiple other items.]

2. Install any thro-hole Keystone testpoints (if applicable).
   Testpoint loops shall be installed in this orientation:

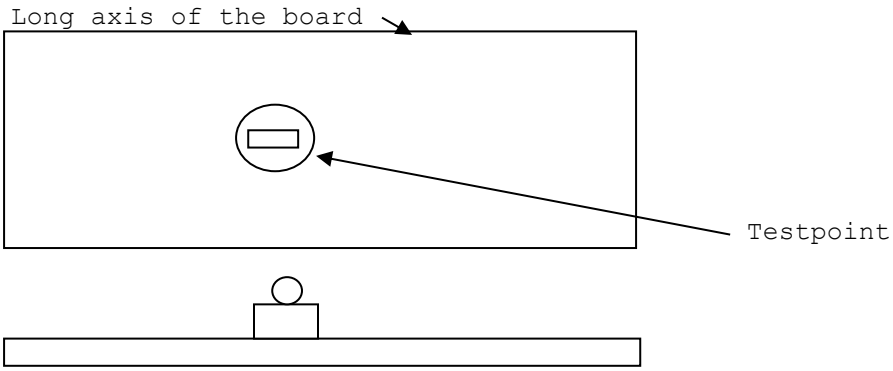

   Note: loop is parallel to the long axis of the board.
   If board is square or round then align testpoints in same direction.

3. 18g jumper for scope ground (if used):

Documents printed to hard copy or saved to personal computers that are not distributed by DCC are considered to be
"UNCONTROLLED REFERENCE COPIES"

Use 18g buss wire, 0.5 inch body, with 0.375 inch leads bent 90 degree.
Install 0.25 inch above PCB (not critical).
Solder and trim.
This component will be used for scope ground clips.

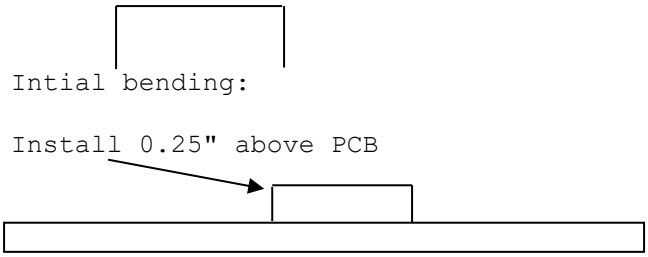

Labeling:

1. No labeling required.

Documents printed to hard copy or saved to personal computers that are not distributed by DCC are considered to be
"UNCONTROLLED REFERENCE COPIES"

Item	Qty	S	Manufacturer	P/N	Description	Designator
1	1	10	Allegro	ACS37220LEZATR-100B3	IC, QFN7, sensor	U1
2	1	6	AVX	06035C104K4T2A	capacitor, 0603, mono, X7R, 50V, 100nF	C7
3	2	6	Yageo	YAG1307	RES 0 OHM JUMPER - 0603	RPU7, RPD5
4	1	6			Do Not Install	RPU3, RPU4, RPU5, RPU6
5	1	6			Do Not Install	RPD3, RPD4, RPD6, RPD7
6	1	6			Do Not Install	C3, C4, C5, C6
7	4	6	Keystone	5005	testpoint, thro, compact, for 62mil PCB, red	PIN3, PIN4, PIN5, PIN6, PIN7
8	1	10			PCB, as from TED-0004114 Rev 4 gerber files	PCB

RoHS compliant required
This BOM generated in conformance with PRC-0002193 Revision 0

Documents printed to hard copy or saved to personal computers that are not distributed by DCC are considered to be "UNCONTROLLED REFERENCE COPIES"

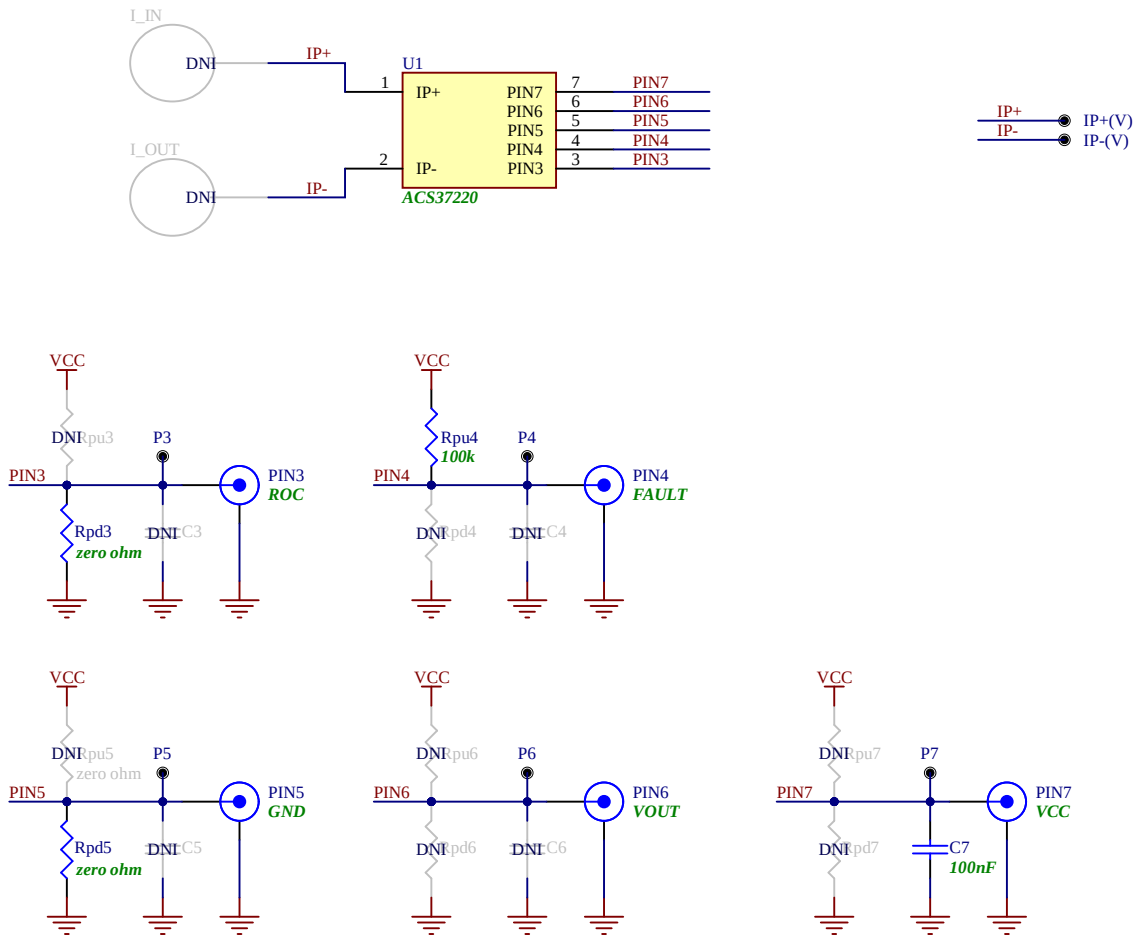

QR_CODE_1
https://www.allegromicro.com/en/products/sense/current-sensor-ics

Fiducial_1 Fiducial_2

RB1 RB2 RB3 RB4 Logo1 Logo2

SJ61A6 SJ61A6 SJ61A6 SJ61A6

DNI
TPScope1

Title: ACSEVB-EZ7		Assembly Variant: ACS37220	
Size: A	Number: TED-0004114-SCH Author: R. Krystian	Revision: 1	Allegro MicroSystems 955 Perimeter Rd Manchester NH 03103
Date: 6/23/2023	Time: 6:00:56 PM	Sheet 1 of 1	
File: TED-0004114.SchDoc			